Appendix A

SWFSC Research Gear and Vessel Descriptions

Table of Contents

1. Trawl Nets 1
2. Longline 5
3. Swordfish deep-set buoy gear 6
4. Various plankton nets (Bongo / Pairovet, Manta) 8
5. Continuous Underway Fish Egg Sampler (CUFES) 10
6. Still and video camera images taken from an ROV 11
7. Active Acoustic Sources used in SWFSC Fisheries Surveys 13
8. Multi-frequency Narrow Beam Scientific Echo Sounders (Simrad EK500 and EK60 Systems - 18, 38, 70, 120, 200, 333 kHz) 16
9. Single Frequency Omnidirectional Sonars (Simrad SX-90) 16
10. Multi-beam echosounder (Simrad ME70) and sonar (Simrad MS70) 16
11. ADCP 17
12. CTD 18
13. SWFSC Vessels used for Survey Activities 20

List of Tables

Table A-1 Operating characteristics of active acoustic sources operated from the R/V *Shimada* ….14

Table A-2 Operating characteristics of active acoustic sources operated from the R/V *McArthur*....14

Table A-3 Operating characteristics of active acoustic sources operated from the R/V *Lasker*…….15

List of Figures

Figure A-1 Marine Mammal Excluder Device installed in Nordic 264 pelagic trawl net. 3
Figure A-2 Schematic Diagram of the NET Systems Hard Bottom Snapper Trawl. 4
Figure A-3 Oozeki trawl at the surface as it is deployed from the vessel. 5
Figure A-4 Schematic example of pelagic longline gear. 6
Figure A-5 Schematic of the Atlantic shallow-set buoy gear and swordfish deep-set buoy gear. 7
Figure A-6 Bongo net diagram. 9
Figure A-7 Conceptual diagram of a Manta net. 10
Figure A-8 Schematic diagram of the Continuous Underway Fish Egg Sampler (CUFES). 11
Figure A-9 The SWFSC Phantom DS4 remotely operated vehicle (ROV), 'Sebastes'. 12
Figure A-10 High-Definition High-Voltage remotely operated vehicle. 13
Figure A-11 Conceptual image of a multi-beam echosounder 17
Figure A-12 Sea-Bird 911 plus CTD profiler on a sampling rosette. 19
Figure A-13 Expendable XBT probe on the left; LM-3A Hand-Held Launcher on the right 20
Figure A-13 NOAA Ship R/V *McArthur II* 21
Figure A-14 NOAA Ship R/V *Bell M. Shimada* 22
Figure A-15 NOAA Ship R/V *Miller Freeman* 23
Figure A-16 Former NOAA Ship R/V *David Starr Jordan* 24
Figure A-17 Illustration of the new NOAA Ship R/V *Reuben Lasker* 25
Figure A-18 R/V *Holliday* 25
Figure A-19 R/V *New Horizon* 26
Figure A-20 R/V *Coral Sea* 27
Figure A-21 R/V *Point Sur* 28
Figure A-22 R/V *Yuzhmorgeologiya* 29
Figure A-23 R/V *Moana Wave* 30
Figure A-24 F/V *Frosti* 31
Figure A-25 Aircraft used for SWFSC research 32
Figure A-26 Other observation platforms developed and used by SWFSC. 32

1. Trawl Nets

A trawl is a funnel-shaped net towed behind a boat to capture fish. The codend, or 'bag,' is the fine-meshed portion of the net most distant from the towing vessel where fish and other organisms larger than the mesh size are retained. In contrast to commercial fishery operations, which generally use larger mesh to capture marketable fish, research trawls often use smaller mesh to enable estimates of the size and age distributions of fish in a particular area. The body of a trawl net is generally constructed of relatively coarse mesh that functions to gather schooling fish so that they can be collected in the codend. The opening of the net, called the 'mouth', is extended horizontally by large panels of wide mesh called 'wings.' The mouth of the net is held open by hydrodynamic force exerted on the trawl doors attached to the wings of the net. As the net is towed through the water, the force of the water spreads the trawl doors horizontally apart.

The trawl net is usually deployed over the stern of the vessel, and attached with two cables, or 'warps,' to winches on the deck of the vessel. The cables are played out until the net reaches the fishing depth. Commercial trawl vessels travel at speeds between two and five knots while towing the net for time periods up to several hours. The duration of the tow depends on the purpose of the trawl, the catch rate, and the target species. At the end of the tow the net is retrieved and the contents of the codend are emptied onto the deck. For research purposes, the speed and duration of the tow and the characteristics of the net must be standardized to allow meaningful comparisons of data collected at different times and locations. Active acoustic devices incorporated into the research vessel and the trawl gear monitor the position and status of the net, speed of the tow, and other variables important to the research design.

Most SWFSC research trawling activities utilize 'pelagic' trawls, which are designed to operate at various depths within the water column. Because pelagic trawl nets are not designed to contact the seafloor, they do not have bobbins or roller gear, which are often used to protect the foot rope of a 'bottom' trawl net as it is dragged along the bottom.

Trawls thought to have the greatest potential for interactions with protected species

Trawl nets with the greatest potential for interactions with marine mammals and consequently the only nets with historical takes of marine mammals during SWFSC surveys include the Nordic 264 trawl, manufactured by Net Systems Inc. (Bainbridge Island, WA), and the modified Cobb mid-water trawl. One of the main factors that contributes to the likelihood of marine mammal takes with these two nets is their large mouth size. The NETS Nordic 264 trawl and the modified Cobb mid-water trawl have total effective mouth areas of 380m^2 and 80m^2 respectively, both of which are significantly larger in size relative to the mouth openings of other nets used by the SWFSC. For comparison, the IKMT net (Isaacs-Kidd Mid-water Trawl) has a mouth size opening that is less than 9m^2.

NETS Nordic 264: Several SWFSC research programs utilize a Nordic 264 two-warp rope trawl, manufactured by Net Systems Inc. (Bainbridge Island, WA). The forward portion of this large two-warp rope trawl is constructed of a series of ropes that function to gather fish into the body of the net. The effective mouth opening of the Nordic 264 is approximately 380 m^2, spread by a pair of 3.0 m (9.8 ft) Lite trawl doors (Churnside et al. 2009). For surface trawls, used to capture fish at or near the surface of the water, clusters of polyfoam buoys are attached to each wing tip of the headrope and additional polyfoam

floats are clipped onto the center of the headrope. Mesh sizes range from 162.6 cm in the throat of the trawl, to 8.9 cm in the codend (Churnside et al. 2009). For certain research activities, a liner may be sewn into the codend to minimize the loss of small fish.

SWFSC's La Jolla Laboratory uses a Nordic 264 pelagic rope trawl to sample adult coastal pelagic fish species during cruises along the U.S. west coast. The primary objective of these cruises is to measure population dynamics of Pacific sardine (*Sardinops sagax*) in order to set management goals for the coastwide U.S. fishery. The Nordic 264 is also used in salmon (*Oncorhychus spp.*) research by the SWFSC Santa Cruz lab (Dotson et al. 2010). During Coastal Pelagic Species surveys, the Nordic 264 two-warp rope trawl is fished during night time hours in order to collect information on sardines, anchovy, Jack and Pacific mackerels, hake, and other species. The trawl is fished at depth for 30 minutes at a time at a speed of 2-4 knots.

Modified-Cobb: A modified-Cobb midwater trawl net is used for SWFSC Juvenile Rockfish Surveys. The net has a headrope length of 26.2 m (86 ft), a mouth of 80 m2, and uses a 3/8-inch codend liner to catch juvenile rockfish. The net is towed for periods of approximately 15 minutes at depth at a speed of approximately 2.0 to 2.5 knots. The target headrope depth is 30 meters for the vast majority of stations, but 10 meters for some of the more nearshore (shallow) stations. There are historical and infrequently occupied depth-stratified stations that are also sampled to 100 meters depth. The fishing depth is monitored using an electronic net monitoring system, and is adjusted by varying the length of trawl line connecting the net to the boat.

Mitigation measures implemented in NETS Nordic 264 and modified-Cobb trawls: Potential for interactions with protected species, such as marine mammals, is often greatest during the deployment and retrieval of the trawl, when the net is at or near the surface of the water. During retrieval of the net, protected species may become entangled in the net while attempting to feed from the codend as it floats near the surface of the water. Recently, considerable effort has been given to developing excluder devices that allow marine mammals to escape from the net while allowing retention of the target species (e.g. Dotson *et al*. 2010). Marine mammal excluder devices (MMEDs) generally consist of a large aluminum grate positioned in the intermediate portion of the net forward of the codend and below an "escape panel" constructed into the upper net panel above the grate. The angled aluminum grate is intended to guide marine mammals through the escape panel and prevent them from being caught in the codend (Dotson *et al*. 2010). MMEDs are currently deployed on all surveys using Nordic 264 nets. The Nordic 264 rope trawl is intended to fish at the surface, while the Cobb trawl is typically fishing at 30 meters headrope depth, thus it is rarely at the surface aside from the deployment and retrieval stages. The SWFSC is developing MMEDs for use with modified-Cobb gear but they have not been fully tested yet. These devices are anticipated to be ready for incorporation into modified-Cobb trawl protocols within a few years. However, implementation of MMEDs on modified cobb trawls is contingent on testing that indicates catch rates of target species are not compromised by use of the MMED.

In addition, two to four acoustic 'pingers' are attached to several places on the headrope and footrope to deter marine mammals from the net. Pingers are manufactured by STM Products, model DDD-03H. Pingers remain operational at depths between 10m and 200m. Tones range from 100 microseconds to seconds in duration, with variable frequency of 5 to 500 kHz, and maximum sound pressure levels of 176 dB RMS re 1 micropascal at 1m at 30-80 kHz. Acoustic pingers have been shown to effectively deter

several species of small cetaceans from becoming entangled in gillnets. While their effectiveness is unproven on trawls, pingers are believed to represent a mitigation measure worth pursuing given their effectiveness when used with other gear types.

(Dotson et al. 2010)

Figure A-1 Marine Mammal Excluder Device installed in Nordic 264 pelagic trawl net.

Trawls with relatively low potential for interactions and no historical interaction with protected species

In addition to the nets described above, SWFSC uses the two-warp NET Systems Hard-Bottom Snapper Trawl to capture fish at or near the seafloor as part of Antarctic survey activities. The lower edge of the bottom trawl net opening is normally protected by a thick footrope ballasted with heavy rubber discs or bobbins, often called 'roller gear' or 'tire gear,' while the upper edge of the trawl net opening is the 'headrope.' Floatation devices attached to the headrope hold the net open vertically as it is towed through the water. Bottom trawl nets used for commercial purposes can be up to 100 meters (328.1 ft) wide. The AMLR bottom trawl net has a headrope length of 28.0 m (92.0 ft) and a footrope length of 38.9 m (127.6 ft) (Stauffer 2004).

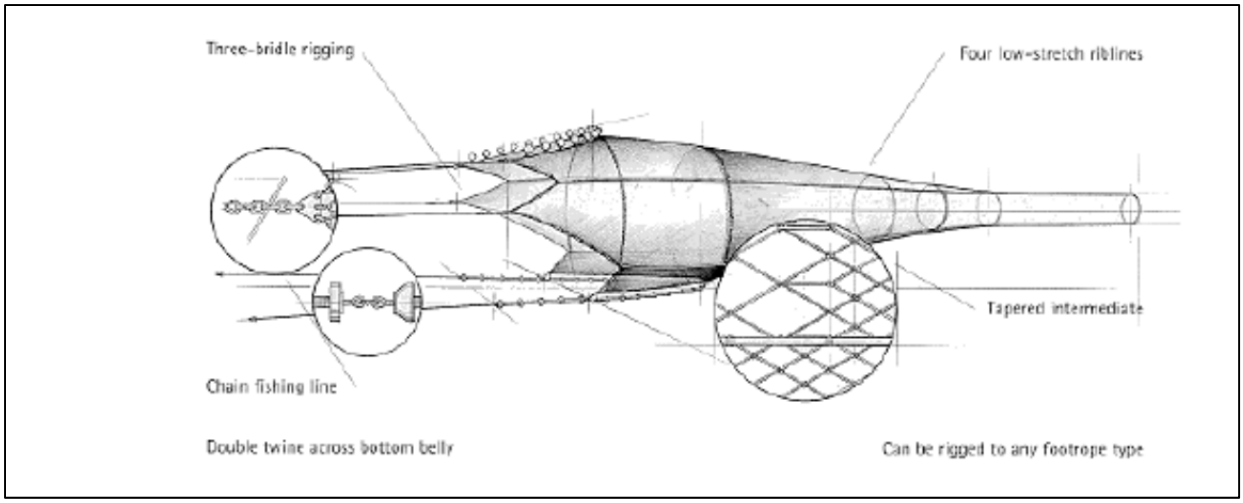

(Net Systems Inc., Bainbridge Island, WA)

Figure A-2 Schematic Diagram of the NET Systems Hard Bottom Snapper Trawl.

SWFSC surveys in all of the research areas utilize various small, fine-mesh, towed nets designed to sample small fish and pelagic invertebrates. The Oozeki net is a newly designed frame trawl with a 5 m^2 mouth area used for quantitative sampling of larval and juvenile pelagic fishes (Figure A-3). Towing depth of the net is easily controlled by adjusting the warp length, and the net samples a large size range of juvenile fishes and micronekton (Oozeki et al. 2004). Micronekton is a term used for a large variety of free-swimming organisms, including small or juvenile fish as well as crustaceans and cephalopods, that are larger than current-drifting plankton but not quite large enough to swim against substantial currents. Similar to the Oozeki net, the IKMT net (Isaacs-Kidd Mid-water Trawl) is used to collect deep water biological specimens larger than those taken by standard plankton nets. The net is attached to a wide, V-shaped, rigid diving vane that keeps the mouth of the net open and maintains the net at depth for extended periods (Yasook et al. 2007). The IKMT is a long, round net approximately 6.5 m (21.3 ft) long, with a series of hoops decreasing in size from the mouth of the net to the codend, which maintain the shape of the net during towing (Yasook et al. 2007). The Tucker Trawl is a medium-sized single-warp net used to study pelagic fish and zooplankton. The Tucker trawl usually consists of a series of nets that can be opened and closed sequentially without retrieving the net from the fishing depth. Similarly the MOCNESS, or Multiple Opening/Closing Net and Environmental Sensing System, is based on the Tucker Trawl principle where a stepping motor is used to sequentially control the opening and closing of the nets. The MOCNESS uses underwater and shipboard electronics for controlling the device. The electronics system continuously monitors the functioning of the nets, frame angle, horizontal velocity, vertical velocity, volume filtered, and selected environmental parameters, such as salinity and temperature. The MOCNESS is used for specialized zooplankton surveys. There has never been an interaction with a protected species for any of the gear types described in this paragraph during SWFSC research activity.

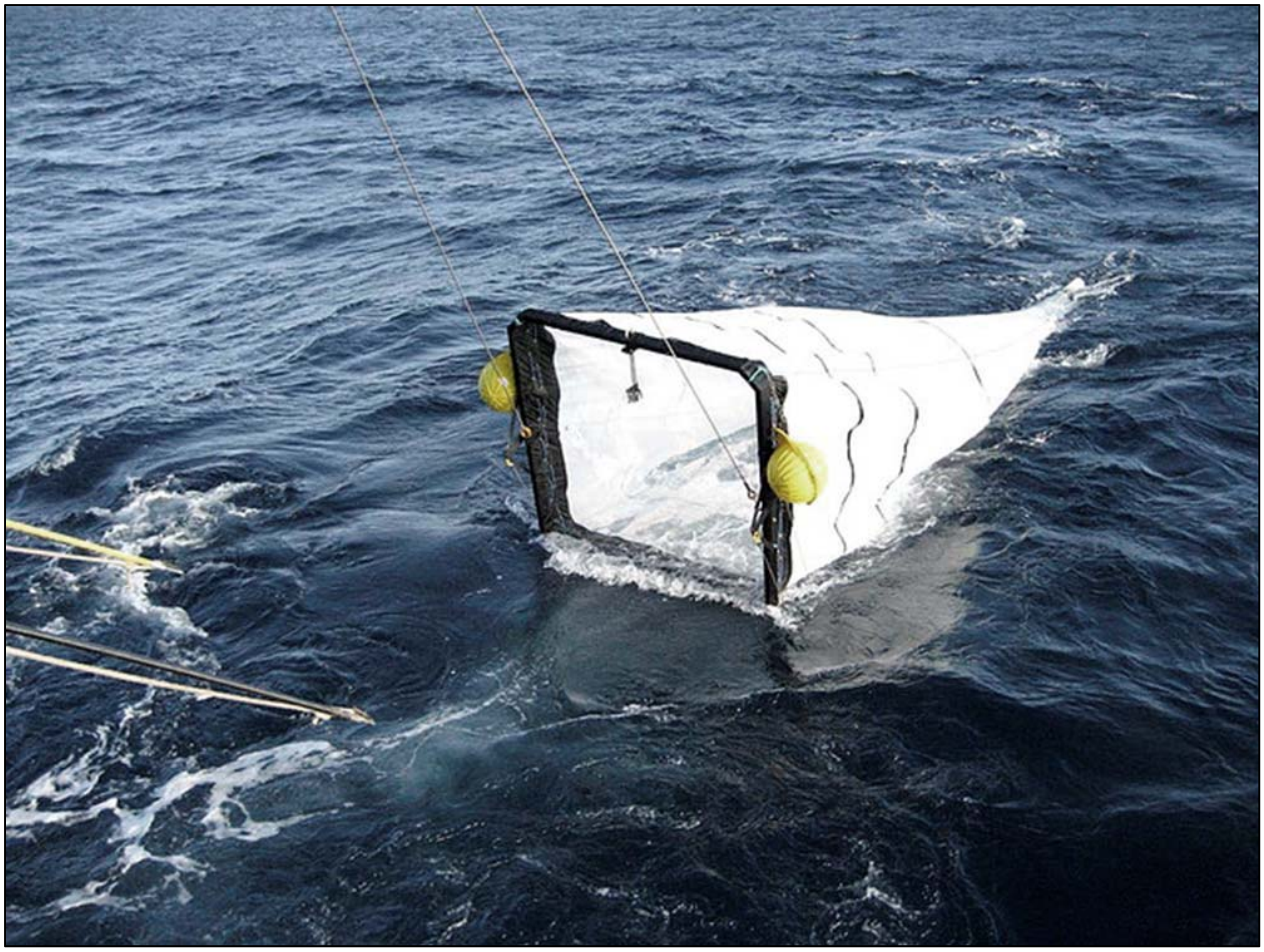

Figure A-3 Oozeki trawl at the surface as it is deployed from the vessel.

2. Longline

Longline vessels fish with baited hooks attached to a mainline or 'groundline'. The length of the longline and the number of hooks depend on the species targeted, the size of the vessel, and the purpose of the fishing activity. A commercial longline can be over 100 kilometers long and can have thousands of hooks attached, however longlines used for research surveys are usually shorter. The longline gear used for SWFSC research surveys for Highly Migratory Species, thresher sharks, and swordfish typically use 200-400 hooks attached to a steel or monofilament mainline from 2 to 12 miles in length. Hooks are attached to the mainline by another thinner line called a 'gangion'. The length of the gangion and the distance between gangions depends on the purpose of the fishing activity. For SWFSC research the gangions are 10 to 36 feet in length and are attached to the mainline at intervals of 50 to 100 feet. Buoys are used to keep pelagic longline gear suspended near the surface of the water, and flag buoys (or 'high flyers') equipped with radar reflectors, radio transmitters, and/or flashing lights are attached to each end of the mainline to enable the crew to find the line for retrieval (Figure A-4).

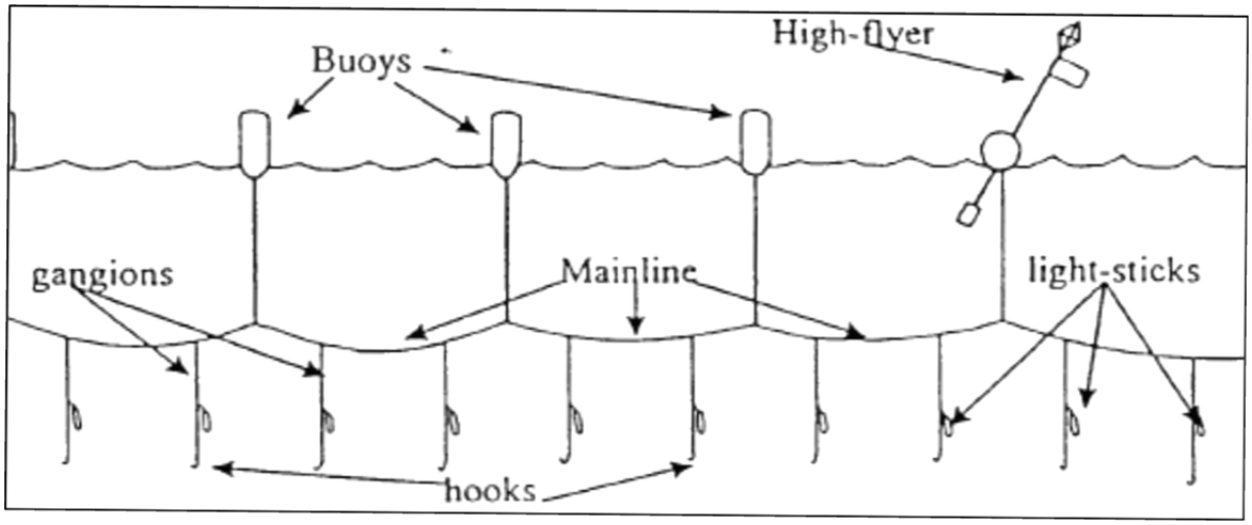

Figure A-4 Schematic example of pelagic longline gear.

In contrast to the pelagic longline gear used for surveys of Highly Migratory Species and Coastal Pelagic Species, bottom (or 'demersal') longline gear may be used to survey species in deeper water, including sablefish. Bottom longlines use fixed hooks strung along a weighted groundline. Bottom longlines used for commercial fishing can be up to several miles long, but those used for SWFSC research related to reproductive life history of sablefish off the coasts of California and Washington use shorter lines with approximately 75 hooks per line. The hooks are baited with squid and set at depths of between 1180 to 1480 feet (360 to 450 meters). Like pelagic longline gear, flag buoys (or 'high flyers') are attached to each end of the groundline to enable the crew to find the line for retrieval. The flag buoys used for bottom longline gear use long buoy lines to allow the weighted groundline to rest on the seafloor while the attached buoys float on the surface to enable retrieval of the gear.

The time period between deployment and retrieval of the longline gear is the 'soak time.' Soak time is an important parameter for calculating fishing effort. For commercial fisheries the goal is to optimize the soak time in order to maximize catch of the target species while minimizing the bycatch rate, and minimizing damage to target species caught on the hooks that may result from predation by sharks or other predators. Soak time can also be an important factor for controlling longline interactions with protected species. Marine mammals, turtles, and other protected species may be attracted to bait, or to fish caught on the longline hooks. Protected species may become caught on longline hooks or entangled in the longline while attempting to feed on the catch before the longline is retrieved.

Birds may be attracted to the baited longline hooks, particularly while the longline gear is being deployed from the vessel. Birds may get caught on the hooks, or entangled in the gangions while trying to feed on the bait. Birds may also interact with longline gear as the gear is retrieved.

3. Swordfish deep-set buoy gear

Swordfish deep-set buoy gear is used to capture and tag swordfish (*Xiphias gladius*) off the coast of Southern California and includes a buoy flotation system (i.e., a strike-indicator float/flag, a large, non-

compressible buoy and a float affixed with a radar reflector). A set of "gear" consists of 250-400 m 500 pound (lb) mainline monofilament rigged with a 1-2 kilogram (kg) drop sinker to orient the mainline and terminal fishing gear vertically in the water column. Unlike longline gear which typically uses a long monofilament mainline suspended horizontally near the surface of the water, deep-set buoy gear does not involve the use of a horizontal mainline. Two monofilament gangions branch from the vertically oriented mainline at 250-400 m and are constructed of 400 lb monofilament leader containing a crimped 14/0 circle hook baited with either squid or mackerel.

The gear is set at a target depth below the thermocline (Figure A-5), at depths of 250-400m, with fishing occurring only during daylight hours, which theoretically constrains the potential for interactions with many non-target species. Deep-set buoy gear research is conducted in the water column below the thermocline. The conditions at this depth consist of relatively cold, oxygen-poor waters that are inhospitable to most pelagic species, which are not physiologically equipped to continuously inhabit the water column at such depth.

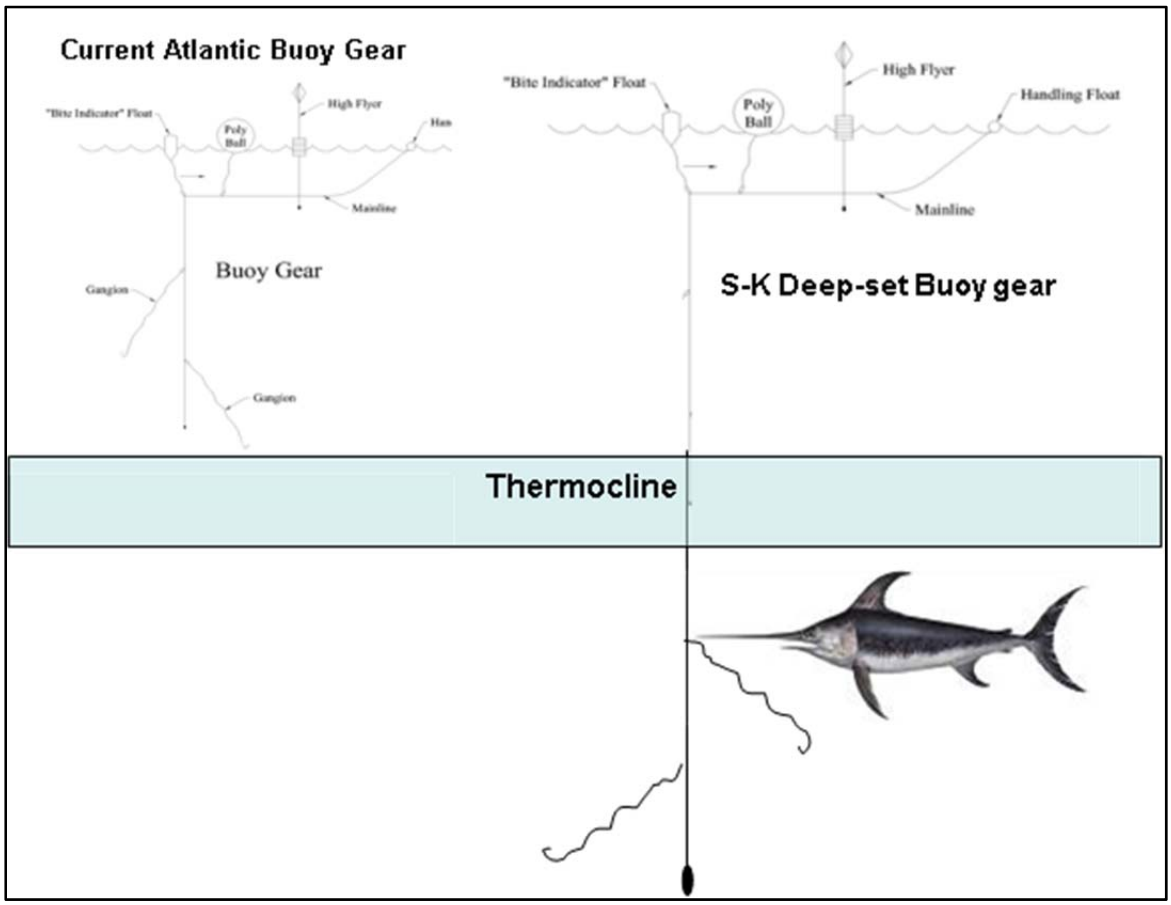

Figure A-5 Schematic of the Atlantic shallow-set buoy gear and swordfish deep-set buoy gear.

The buoys are deployed in a restricted spatial grid such that all of the indicator buoys can be continuously monitored from the vessel (within a maximum 4 nm grid area). When an indicator flag rises, the buoy set is immediately tended and the animal caught is either released or tagged and released in order to increase

post-hooking survivorship of all animals. In addition, slack in the fishing line is minimized in order to maintain a vertical profile and keep hooks at or below 250 m depth to minimize potential for marine mammal interactions. Circle hooks are used, which have been shown in other hook-and-line fisheries to increase post-hooking survivorship with selected non-target species.

4. Various plankton nets (Bongo / Pairovet, Manta)

SWFSC research activities include the use of several plankton sampling nets that employ very small mesh to sample plankton and fish eggs from various parts of the water column. Plankton sampling nets usually consist of fine mesh attached to a weighted frame. The frame spreads the mouth of the net to cover a known surface area. The Bongo nets used for CalCOFI surveys have openings 71 cm in diameter and employ a 505 µm mesh. The nets are 3 meters in length with a 1.5 m cylindrical section coupled to a 1.5 m conical portion that tapers to a detachable codend constructed of 333 µm or 0.505 µm nylon mesh (Figure A-6).

The bongo nets are towed through the water at an oblique angle to sample plankton over a range of depths. During each plankton tow, the bongo nets are deployed to a depth of approximately 210 m and are then retrieved at a controlled rate so that the volume of water sampled is uniform across the range of depths. In shallow areas, sampling protocol is adjusted to prevent contact between the bongo nets and the seafloor. A collecting bucket, attached to the cod-end of the net, is used to contain the plankton sample. When the net is retrieved, the collecting bucket can be detached and easily transported to a laboratory. Some bongo nets can be opened and closed using remote control to enable the collection of samples from particular depth ranges. A group of depth-specific bongo net samples can be used to establish the vertical distribution of zooplankton species in the water column at a site. Bongo nets are generally used to collect zooplankton for research purposes, and are not used for commercial harvest.

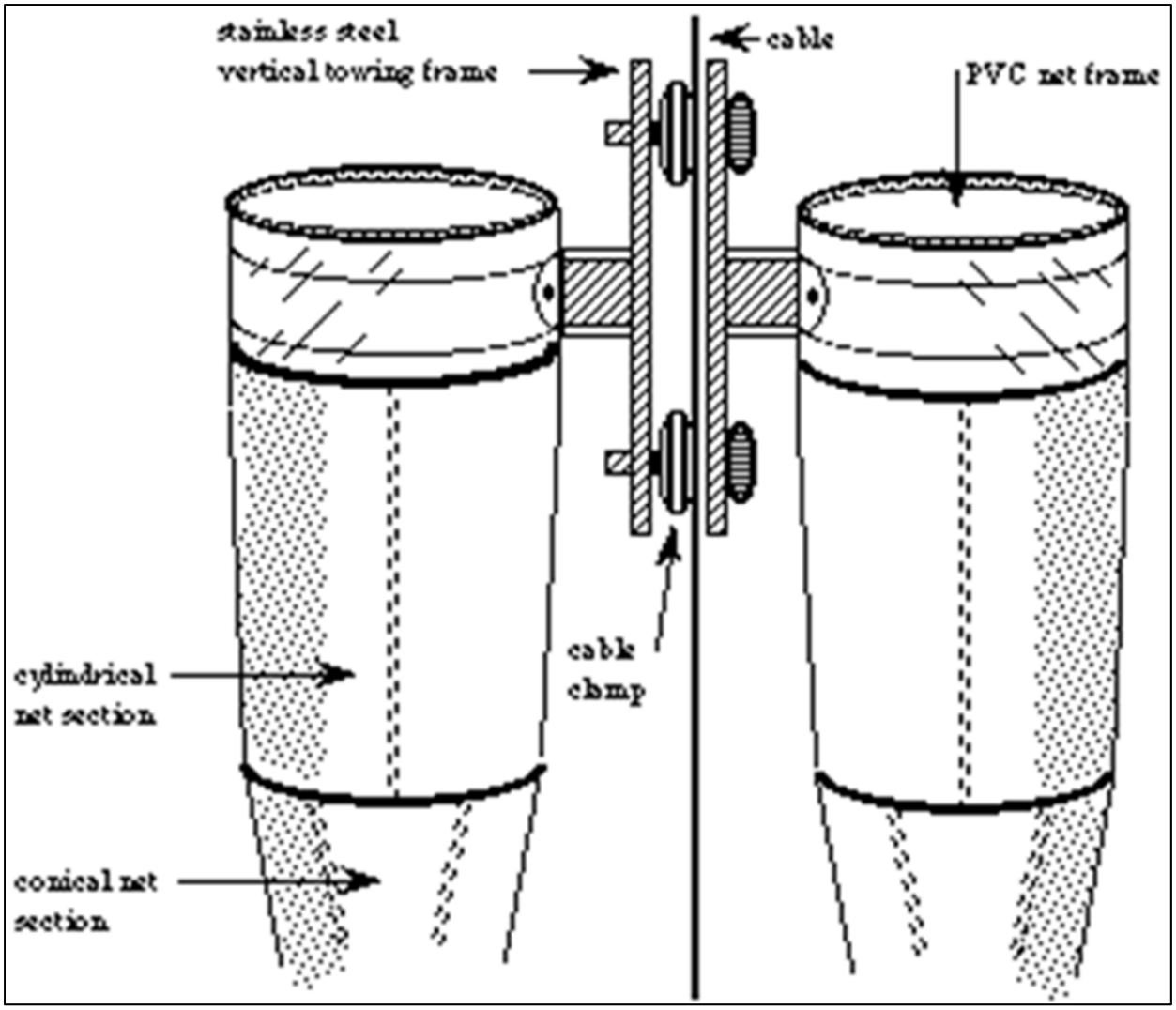

(Aquatic Research Instruments 2011)

Figure A-6 Bongo net diagram.

The Pairovet is a bongo-type device consisting of two nets. The Pairovet frame was designed to facilitate comparison of nets constructed of various materials and to provide replicate observations when using similar nets. The frame is constructed of 6061-T6 aluminum with stainless steel fittings. The nets are nylon mesh attached to the frame with adjustable stainless steel strapping.

Manta nets are towed horizontally at the surface of the water to sample neuston (organisms living at or near the water surface). The frame of the Manta net is supported at the ocean surface by aquaplanes (wings) that provide lift as the net is towed horizontally through the water (Figure A-7). To ensure repeatability between samples, the towing speed, angle of the wire, and tow duration must be carefully controlled. The Manta nets used for CalCOFI surveys employ 505 µm nylon mesh in the body of the net and 303 µm mesh in the codend. The frame has a mouth area of 0.1333 m^2. For CalCOFI surveys, the Manta net is towed for periods of 15 minutes at a speed of approximately 2.0 knots.

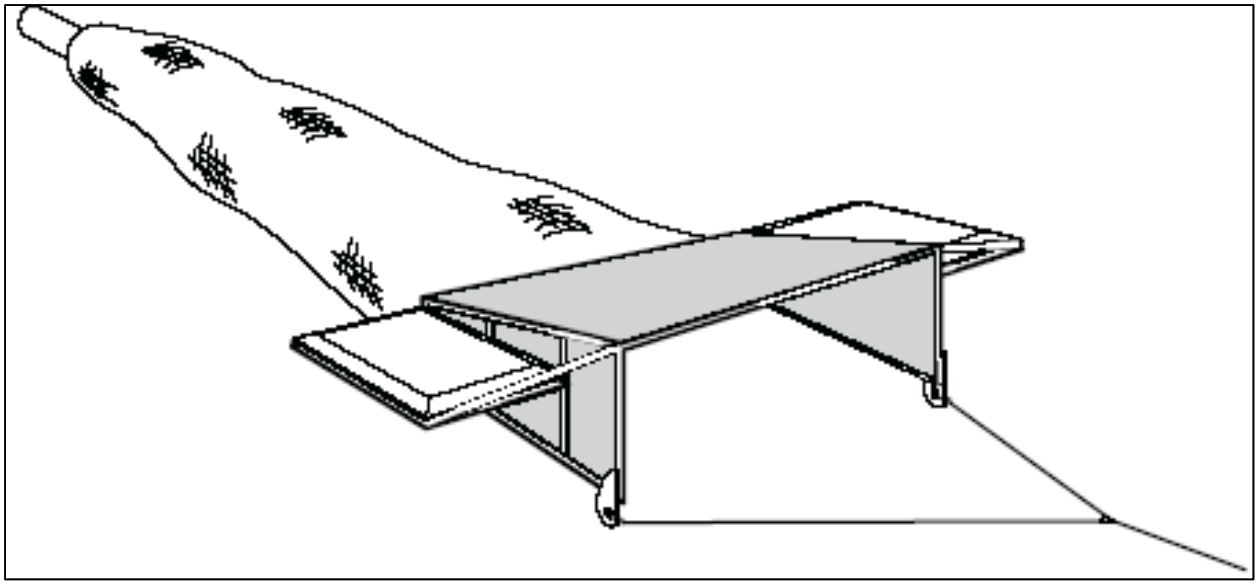

Figure A-7 Conceptual diagram of a Manta net.

5. Continuous Underway Fish Egg Sampler (CUFES)

The Continuous Underway Fish egg sampler (CUFES) is used to collect pelagic fish eggs from the water column while the vessel is underway. The CUFES device consists of a water intake approximately three meters below the surface of the water connected to a high capacity pump capable of pumping approximately 640 liters of water per minute through the device. Particles in the bulk water stream are concentrated by an oscillating mesh. Samples are transferred to a collecting device at a rate of approximately 20 liters per minute, while the bulk water is discharged overboard (Figure A-8). Samples are collected and preserved on mesh net over sequential sampling intervals. Ancillary data including temperature, salinity, chlorophyll-*a* fluorescence, time and location are also collected automatically. The fish eggs within each sequential sample are identified and counted, and the preserved sample is cataloged for future reference.

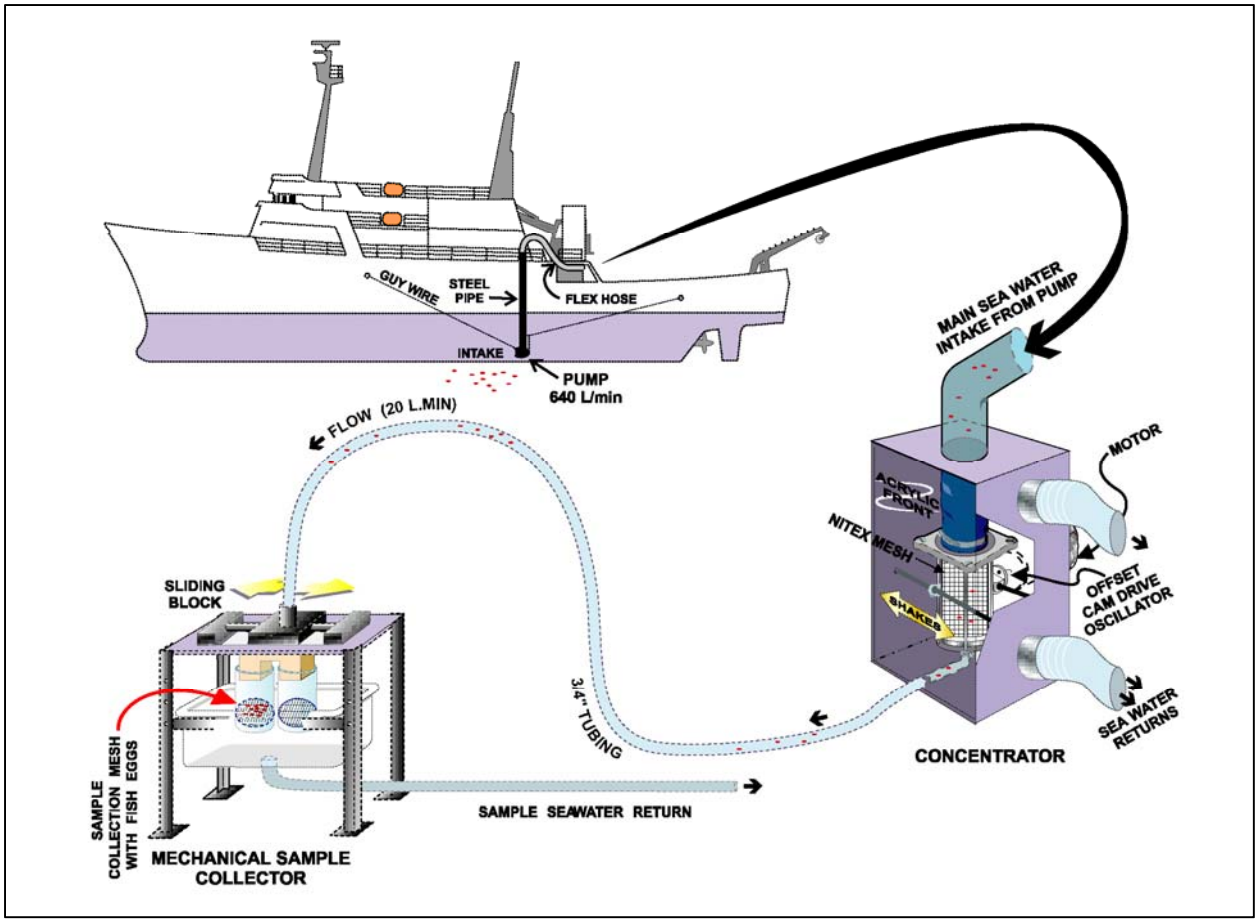

(from: http://cufes.ucsd.edu/graf/egg-pump.pdf)

Figure A-8 Schematic diagram of the Continuous Underway Fish Egg Sampler (CUFES).

Continuous sampling from a ship moving at full speed is an effective technique for assessing the spatiotemporal aggregation of fish eggs in surface water and the CUFES is designed for this purpose. The CUFES data are used to estimate spawning habitat distribution and spawning biomass, which are important parameters upon which fisheries management decisions may be based. The CUFES device is used in the California Current research area during both CalCOFI research surveys and Coastal Pelagic Species research surveys off of the coast of California within the U.S. EEZ.

6. Still and video camera images taken from an ROV

The SWFSC maintains and deploys two remotely operated vehicles (ROVs). The ROVs are used to quantify fish and shellfish, photograph fish for identification, and provide views of the bottom habitat for habitat-type classification studies. Still and video camera images are used to monitor populations of the endangered white abalone, and also for assessment of southern California rockfish assemblages and ground-truthing of sonar surveys of groundfish habitats as part of the Collaborative Optically-assisted Acoustic Survey Technique (COAST) program. Precise georeferenced data from ROV platforms also

enables SCUBA divers to utilize bottom time more effectively for collection of brood stock and other specimens.

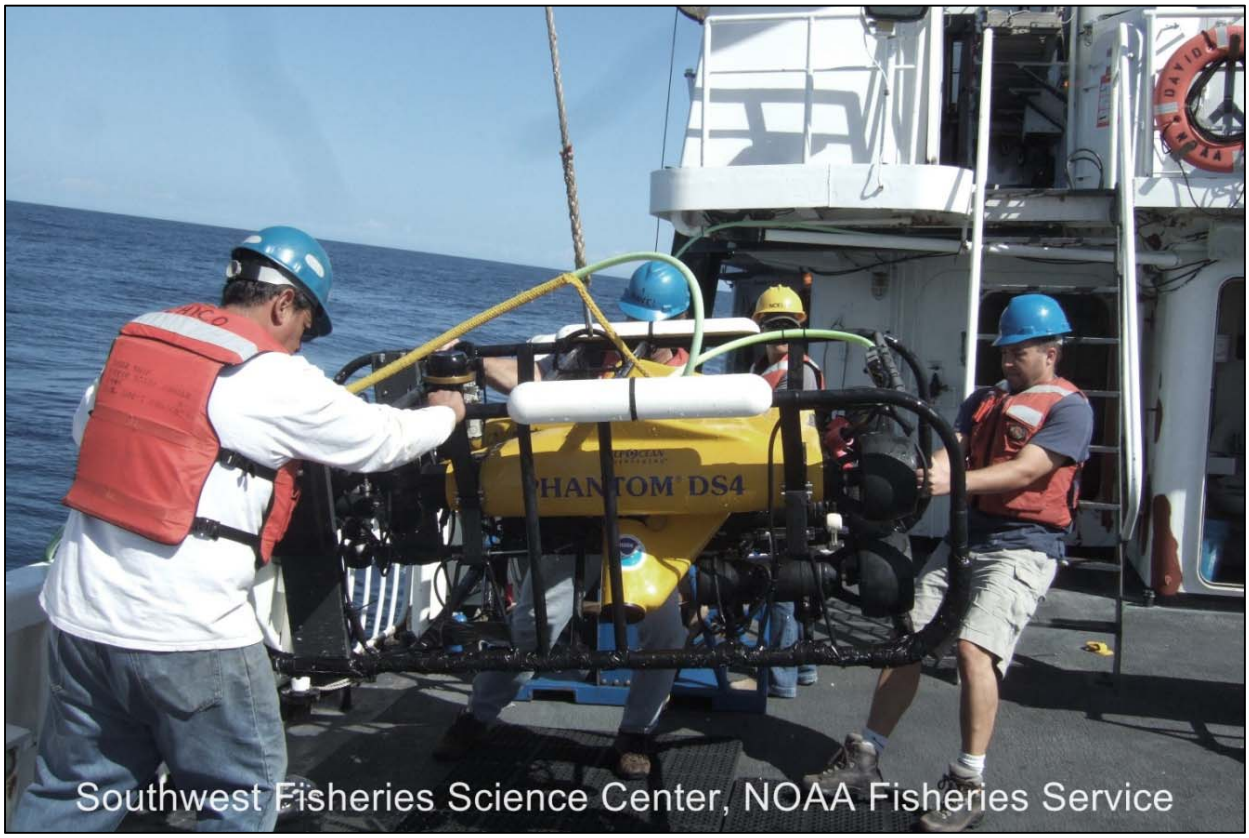

(SWFSC)

Figure A-9 The SWFSC Phantom DS4 remotely operated vehicle (ROV), 'Sebastes'.

Since 1999 SWFSC has operated a Phantom DS4 ROV to collect video and still camera images (Figure A-9). The Phantom DS4 platform is driven horizontally by four ½ horsepower thrusters, and vertically by two ¼ horsepower thrusters. The Phantom DS4 can operate at a maximum depth of 600 meters. Standard instrumentation on the ROV includes a directional hydrophone, a CTD (see section 12) , a differential Global Positioning System (dGPS), pitch and roll sensors, still cameras, and video cameras; some additional instrumentation can be added to the platform as needed. The ROV platform also includes a reference laser system to facilitate *in situ* specimen measurements and to determine the distance of the ROV platform from underwater objects.

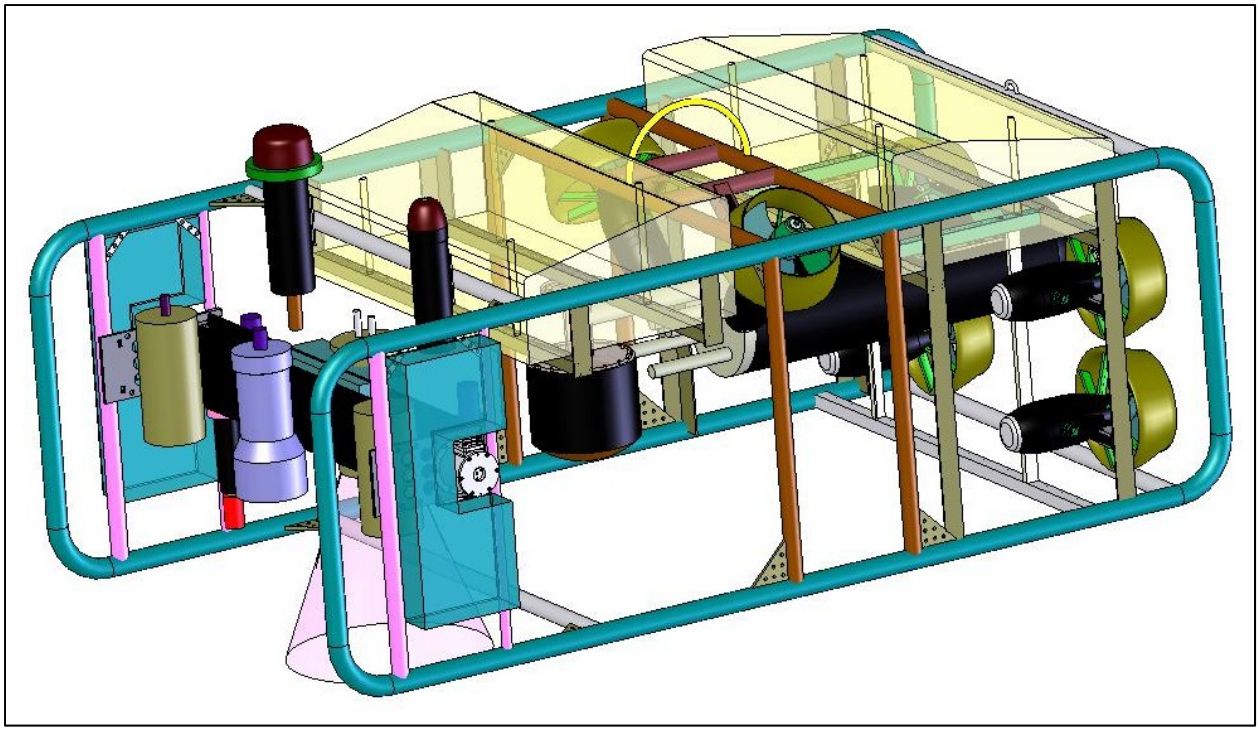

(SWFSC)

Figure A-10 High-Definition High-Voltage remotely operated vehicle.

The SWFSC Benthic Resources Group has also recently designed and constructed a custom high-definition high-voltage (HDHV) remotely operated vehicle (ROV) for surveying groundfish and benthic invertebrates in deepwater environments (Figure A-10). The HDHV ROV is powered by six 300-volt brushless DC thrusters. The DC thrusters are efficient and quiet to maximize bottom time while minimizing behavioral disturbance to target species. The HDHV ROV platform is equipped with video and still cameras, an illumination system, scanning sonar, CTD, a dissolved oxygen sensor, laser range-finding and laser caliper systems, and the capability to process data while underway to facilitate real-time georeferenced collection of oceanographic data.

7. Active Acoustic Sources used in SWFSC Fisheries Surveys

A wide range of active acoustic sources are used in SWFSC fisheries surveys for remotely sensing bathymetric, oceanographic, and biological features of the environment, Most of these sources involve relatively high frequency, directional, and brief repeated signals tuned to provide sufficient focus and resolution on specific objects. Tables showing important characteristics of these sources for each of the primary operational research vessels conducting fisheries surveys in the SWFSC are given below in Tables A-1 through A-3, followed by descriptions of some of the primary general categories of sources, including all those for which acoustic takes of marine mammals are calculated.

Table A-1 Operating characteristics of active acoustic sources operated from the *R/V* Shimada

Active Acoustic System (product name and #)	Operating Frequencies	Maximum Source Level in dB/1µPa (referenced to 1m)	Single ping duration (ms) and repetition rate (Hz)	Orientation/ Directionality	Nominal Beamwidth (degrees)
Simrad EK500 and EK60 Narrow Beam Scientific Echo Sounders	18, 38, 70, 120, 200, 333 kHz (or a subset). Primary frequencies are 38, 70, 120 and 200 kHz.	224 dB	Variable. Most common setting is 1 ms duration and 0.5 Hz repetition rate.	Downward looking	7°
Simrad ME70 Multi-Beam Echo Sounder	70-120 kHz	205 dB	0.06 to 5 ms, 1-4 Hz	Primarily Downward Looking	130°
Teledyne RD Instruments Acoustic Doppler Current Profiler (ADCP), Ocean Surveyor	75 kHz	224 dB	0.2 Hz rep rate	Downward looking	30°
Simrad ITI Catch Monitoring System	27-33 kHz	214 dB	0.05-0.5 Hz rep rate	Downward looking	40°
Simrad FS70 Third Wire Net Sonde	120 kHz	Unknown, maximum transmit power is 1 kW	Variable	Downward looking	40°

Table A-2 Operating characteristics of active acoustic sources operated from the R/V McArthur

Active Acoustic System (product name and #)	Operating Frequencies	Maximum Source Level in dB/1µPa (referenced to 1m)	Single ping duration (ms) and repetition rate (Hz)	Orientation/ Directionality	Nominal Beamwidth (degrees)
Simrad EK500 and EK60 Narrow Beam Scientific Echo	18, 38, 70, 120, 200, 333 kHz (or a subset). Primary frequencies 38, 70,	224 dB	Variable. Most common setting is 1 ms duration and	Downward looking	7°

Sounders	120 and 200 kHz.		0.5 Hz repetition rate.		

Table A-3 Operating characteristics of active acoustic sources operated from the *R/V* Lasker

Active Acoustic System (product name and #)	Operating Frequencies	Maximum Source Level in dB/1µPa (referenced to 1m)	Single ping duration (ms) and repetition rate (Hz)	Orientation/ Directionality	Nominal Beamwidth (degrees)
Simrad EK500 and EK60 Narrow Beam Scientific Echo Sounders	18, 38, 70, 120, 200, 333 kHz (or a subset). Primary frequencies are 38, 70, 120 and 200 kHz.	224 dB	Variable. Most common setting is 1 ms duration and 0.5 Hz repetition rate.	Downward looking	7°
Simrad ME70 Multi-Beam Echo Sounder	70-120 kHz	205 dB	0.06 to 5 ms, 1-4 Hz	Primarily Downward Looking	130°
Simrad MS70 Multi-Beam Sonar	75-112 kHz	206 dB	2 to 10 ms, 1-2 Hz	Primarily Side-Looking	60°
Simrad SX90 Narrow Beam Sonar	20-30 kHz	219 dB	Variable	Omni-Directional	4-5° (variable for tilt angles from 0 to 45° from horizontal)
Teledyne RD Instruments Acoustic Doppler Current Profiler (ADCP), Ocean Surveyor	75 kHz	224 dB	0.2 Hz rep rate	Downward looking	30°
Simrad ITI Catch Monitoring System	27-33 kHz	214 dB	0.05-0.5 Hz rep rate	Downward looking	40°
Simrad FS70 Third Wire Net Sonde	120 kHz	Unknown, maximum transmit power is 1 kW	Variable	Downward looking	40°

8. Multi-frequency Narrow Beam Scientific Echo Sounders (Simrad EK500 and EK60 Systems - 18, 38, 70, 120, 200, 333 kHz)

Similar to multibeam echosounders, multi-frequency split-beam sensors are deployed from NOAA survey vessels to acoustically map the distributions and estimate the abundances and biomasses of many types of fish; characterize their biotic and abiotic environments; investigate ecological linkages; and gather information about their schooling behavior, migration patterns, and avoidance reactions to the survey vessel. The use of multiple frequencies allows coverage of a broad range of marine acoustic survey activity, ranging from studies of small plankton to large fish schools in a variety of environments from shallow coastal waters to deep ocean basins. Simultaneous use of several discrete echosounder frequencies facilitates accurate estimates of the size of individual fish, and can also be used for species identification based on differences in frequency-dependent acoustic backscattering between species. The SWFSC uses devices that transmit and receive at six frequencies ranging from 18 to 333 kHz.

9. Single Frequency Omnidirectional Sonars (Simrad SX-90)

Low frequency, high-resolution, long range fishery sonars including the SX-90 operate with user selectable frequencies between 20 and 30 kHz providing longer range and prevent interference from other vessels. These sources provide an omnidirectional imaging around the source with three different vertical beamwidths, single or dual vertical view and 180° tiltable vertical views are available. At 30 kHz operating frequency, the vertical beamwidth is less than 7 degrees. This beam can be electronically tilted from +10 to -80 degrees, which results in differential transmitting beam patterns. The cylindrical multi-element transducer allows the omnidirectional sonar beam to be electronically tilted down to -60 degrees, allowing automatic tracking of schools of fish within the whole water volume around the vessel. The signal processing and beamforming is performed in a fast digital signal processing system using the full dynamic range of the signals.

10. Multi-beam echosounder (Simrad ME70) and sonar (Simrad MS70)

Multibeam echosounders and sonars work by transmitting acoustic pulses into the water then measuring the time required for the pulses to reflect and return to the receiver and the angle of the reflected signal. The depth and position of the reflecting surface can be determined from this information, provided that the speed of sound in water can be accurately calculated for the entire signal path.

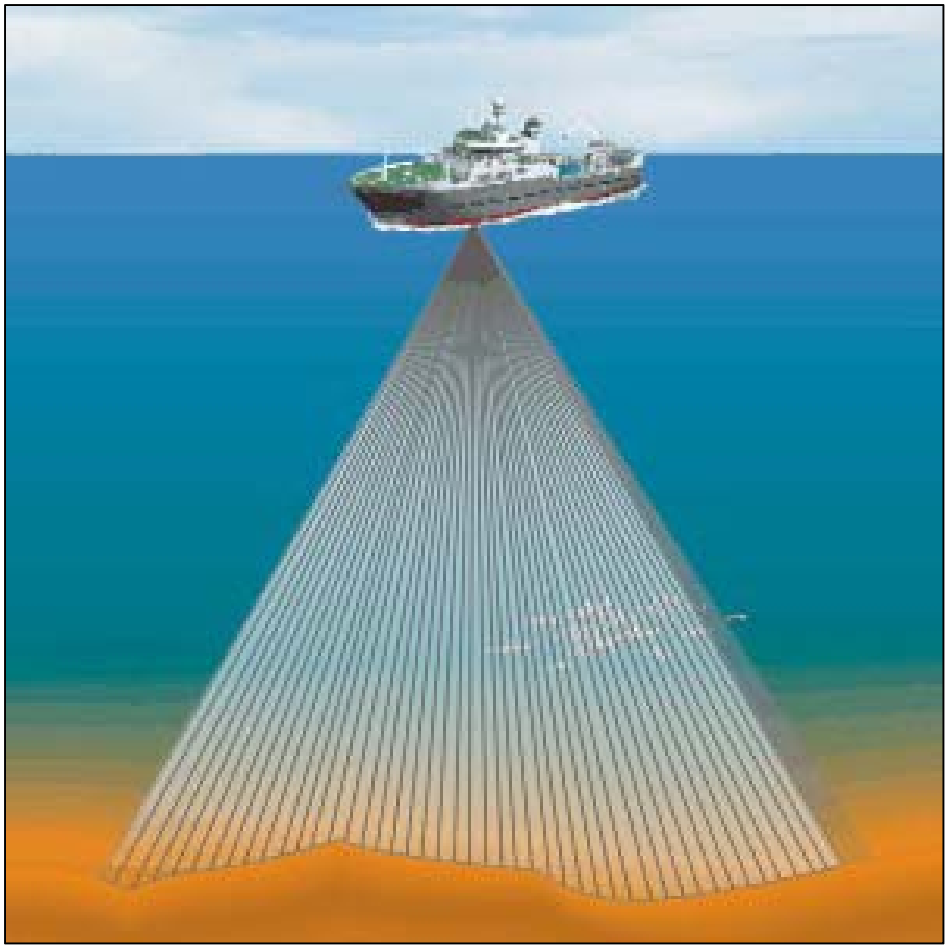

(from Simrad – www.simrad.com)

Figure A-11 Conceptual image of a multi-beam echosounder

The use of multiple acoustic 'beams' allows coverage of a greater area compared to single beam sonar. The sensor arrays for multibeam echosounders and sonars are usually mounted on the keel of the vessel and have the ability to look horizontally in the water column as well as straight down. Multibeam echosounders and sonars are used for mapping seafloor bathymetry, estimating fish biomass, characterizing fish schools, and studying fish behavior. The multibeam echosounders used by SWFSC are mounted to the hull of the research vessels and emit frequencies in the 70-120 kHz range.

11. ADCP

An Acoustic Doppler Current Profiler, or ADCP, is a type of sonar used for measuring water current velocities simultaneously at a range of depths. In the past, current depth profile measurements required the use of long strings of current meters. ADCP enables measurements of current velocities across an entire water column, replacing the long strings of current meters. An ADCP anchored to the seafloor can measure current speed not just at the bottom, but also at equal intervals all the way up to the surface (WHOI 2011). An ADCP instrument can also be mounted to a mooring, or to the bottom of a boat.

The ADCP measures water currents with sound, using the Doppler Effect. A sound wave has a higher frequency when it moves towards the sensor (blue shift) than when it moves away (red shift). The ADCP works by transmitting "pings" of sound at a constant frequency into the water. As the sound waves travel, they ricochet off particles suspended in the moving water, and reflect back to the instrument (WHOI 2011). Due to the Doppler Effect, sound waves bounced back from a particle moving away from the profiler have a slightly lowered frequency when they return. Particles moving toward the instrument send back higher frequency waves. The difference in frequency between the waves the profiler sends out and the waves it receives is called the Doppler shift. The instrument uses this shift to calculate how fast the particle and the water around it are moving. Sound waves that hit particles far from the profiler take longer to come back than waves that strike close by. By measuring the time it takes for the waves to return to the sensor, and the Doppler shift, the profiler can measure current speed at many different depths with each series of pings (WHOI 2011).

ADCPs operate at frequencies between 75 and 300 kHz. High frequency pings yield more precise data, but low frequency pings travel farther in the water. Thus, a compromise must be made between the distance that the profiler can measure and the precision of the measurements (WHOI 2011).

ADCPs that are bottom-mounted need an anchor to keep them on the bottom, batteries, and a data logger. Vessel-mounted instruments need a vessel with power, a shipboard computer to receive the data, and a GPS navigation system so the ship's movements can be subtracted from the current velocity data (WHOI 2011).

12. CTD

‘CTD’ is an acronym for Conductivity, Temperature, and Depth. A CTD profiler measures these parameters, and is the primary research tool for determining chemical and physical properties of seawater. A shipboard CTD is made up of a set of small probes attached to a large (1 to 2 m in diameter) metal rosette wheel. The rosette is lowered through the water column on a cable, and CTD data are observed in real time via a conducting cable connecting the CTD to a computer on the ship. The rosette also holds a series of sampling bottles that can be triggered to close at different depths in order to collect a suite of water samples that can be used to determine additional properties of the water over the depth of the CTD cast. A standard CTD cast, depending on water depth, requires two to five hours to complete (WHOI 2011). The data from a suite of samples collected at different depths are often called a depth profile, and are plotted with the value of the variable of interest on the x-axis and the water depth on the y-axis. Depth profiles for different variables can be compared in order to glean information about physical, chemical, and biological processes occurring in the water column.

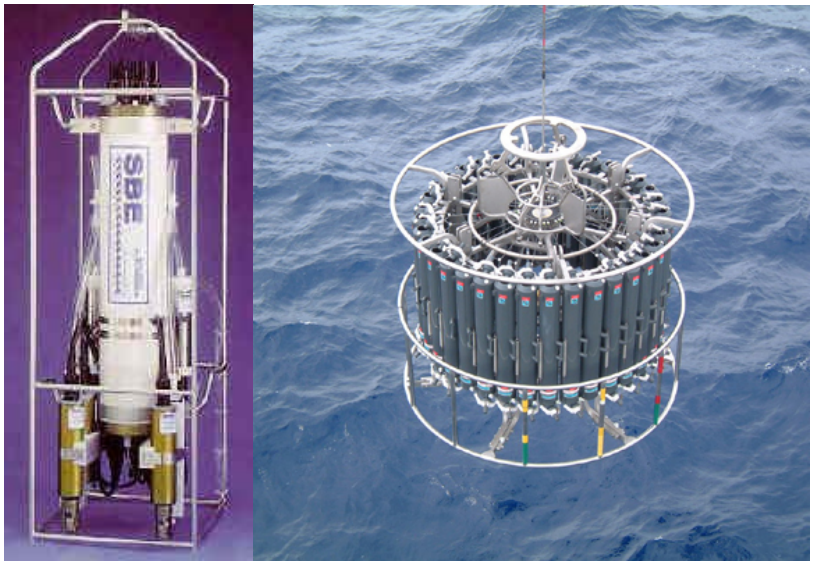

(Sea-Bird Electronics, Bellevue WA)

Figure A-12 Sea-Bird 911 plus CTD profiler on a sampling rosette.

Conductivity is measured as a proxy for salinity, or the concentration of salts dissolved in the seawater. Salinity is expressed in 'practical salinity units' (psu) which represent the sum of the concentrations of several different ions. Salinity is calculated from measurements of conductivity. Salinity influences the types of organisms that live in a body of water, as well as physical properties of the water. For instance, salinity influences the density and freezing point of seawater.

Temperature is generally measured using a high-sensitivity thermistor protected inside a thin walled stainless steel tube. The resistance across the thermistor is measured as the CTD profiler is lowered through the water column to give a continuous profile of the water temperature at all water depths.

The depth of the CTD sensor array is continuously monitored using a very sensitive electronic pressure sensor. Salinity, temperature, and depth data measured by the CTD instrument are essential for characterization of seawater properties.

SWFSC also uses Lockheed Martin Sippican's Expendable Bathythermographs (XBT) to provide ocean temperature versus depth profiles. A standard XBT/XSV system consists of an expendable probe, a data processing/recording system, and a launcher. An electrical connection between the probe and the processor/recorder is made when the canister containing the probe is placed within the launcher and the launcher breech door is closed. Following launch, wire dereels from the probe as it descends vertically through the water. Simultaneously, wire dereels from a spool within the probe canister, compensating for any movement of the ship and allowing the probe to freefall from the sea surface unaffected by ship motion or sea state.

The XBT probes consist of a metal weight surrounding a temperature probe, attached to a copper wire that conducts the signal to the vessel. The copper wire is protected within a plastic housing (Figure A-13). Probes are generally launched from the leeward side of the vessel and as far aft as possible. Launching

from these locations helps obtain high reliability and minimizes the chances that the fine copper probe wire will come in contact with the ship's hull which may cause spikes in the data or a catastrophic wire break. A portable shipboard data acquisition system records, processes, and interprets the data the probes collect.

XBT drops occur at predetermined times along with surface chlorophyll sampling. Opportunistic drops may also occur. Typically, three XBT drops are made per survey day. XBT drops may be repeated if the displayed profile does not show a well-defined mixed layer and thermocline, which typically occurs at 15°C in the eastern tropical Pacific Ocean and 10°C in the California Current.

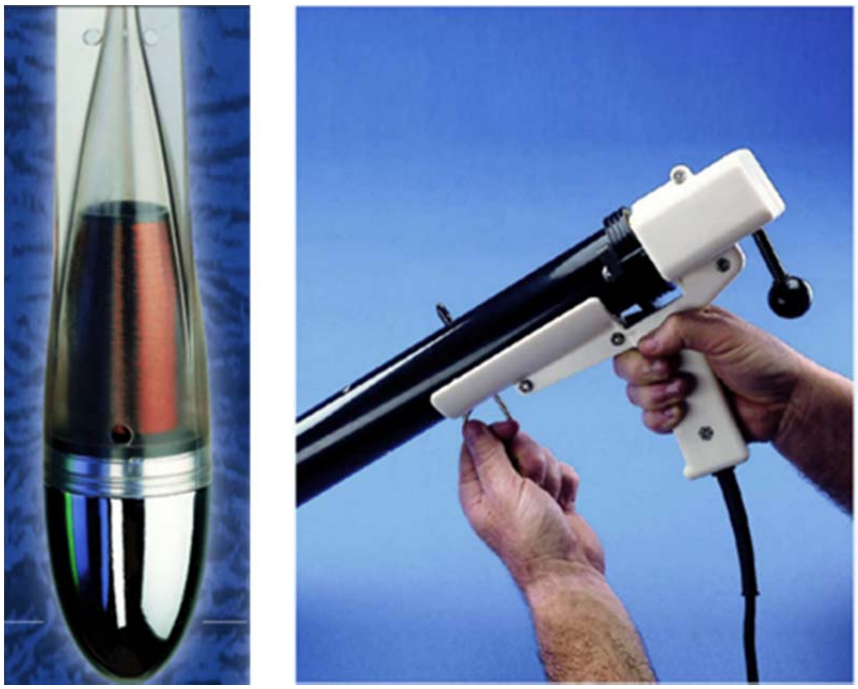

(Lockheed Martin Sippican Inc.)

Figure A-13 Expendable XBT probe on the left; LM-3A Hand-Held Launcher on the right

Deep Blue probes are preferred, as they survey to a depth of 760 m and take approximately 2 minutes per drop. Probes are launched using a Hand-Held Launcher (Figure A-13). As the XBT probes are expendable, they are not retrieved and are left on the seafloor after data collection.

13. SWFSC Vessels used for Survey Activities

NMFS employs NOAA-operated research vessels, chartered vessels, and vessels operated by cooperating agencies and institutions to conduct research, depending on the survey and type of research.

The *David Starr Jordan*, a NOAA fisheries survey vessel formerly home-ported in San Diego, was decommissioned in August 2011. Her replacement, the NOAA Ship *Reuben Lasker* will come online in 2013 but will not be considered fully operational until 2014. In the meantime, surveys are conducted aboard other NOAA ships (*MacArthur II*, *Miller Freeman*, *Shimada*), UNOLS vessels (*New Horizon*) and

various charter vessels. Several small boats are located in Santa Cruz and La Jolla and deployed as far away as the Eastern Tropical Pacific and Antarctica.

NOAA-Operated Research Vessels

McArthur II

The R/V *McArthur II* was converted from a T-AGOS surveillance vessel when NOAA acquired it from the U.S. Navy in 2002. The *McArthur II* is home-ported in Newport, Oregon and shared between the west coast National Marine Sanctuaries and NMFS. Approximately half of her time is used to support Protected Resource Division marine mammal surveys. The ship is 68.3 m (224 ft.) in length with a 15 ft. draft. It can cruise at 11 knots with two 800 hp General Electic diesel motors and two 2.6 m (8.5 ft.) propellers. The deck has two oceanographic winches, an A-Frame, and a J-Frame. The *McArthur I*I can accommodate up to 15 scientists in a crew of 37. The ship conducts oceanic research and assessment throughout the eastern Pacific, engaging in chemical, meteorological, and biological sampling on a large scale.

Figure A-13 NOAA Ship R/V *McArthur II*

Bell M. Shimada

The R/V *Bell M. Shimada* is home-ported in Newport, Oregon and shared between the Northwest Fisheries Science Center (NWFSC) and the SWFSC. Shakedown cruises were conducted in 2010 and operational surveys began for 2011. The *Bell M. Shimada* is one of the most technologically-advanced fisheries vessels in the world. Many of the advances are focused on making the boat quieter and reducing disturbance to marine life. The vessel is 68.3 m (209 ft.) in length with a diesel electric drive system with two 1,508 hp propulsion motors and one 4.3 m (14.1 ft.) propeller. The deck has an oceanographic winch, two stern trawl winches, and two A-Frame winches. The ship can cruise at 12 knots. The *Bell M. Shimada* can accommodate a total of 39 crewmembers, including 15 scientists. The technologies on the boat offer scientists the ability to monitor fish populations without altering their behavior, allowing accurate data collection.

Figure A-14 NOAA Ship R/V *Bell M. Shimada*

Miller Freeman

The R/V *Miller Freeman* is home-ported in Newport, Oregon and shared between the Alaska Fisheries Science Center, NWFSC, and SWFSC. The ship is currently laid up awaiting funding for a mid-life overhaul. At 65.5 m (215 ft.) long, the *Miller Freeman* is one of the largest research trawlers in the United States and is capable of operating in any waters in the world. The vessel can cruise at 11 knots with one 2,200hp General Motors diesel engine and one 3 m (10.1 ft.) propeller. On the deck are two cranes, two A-Frames, including a large stern gantry, and eight winches. The ship can accommodate up to 45 people, including up to 11 scientists.

Figure A-15 NOAA Ship R/V *Miller Freeman*

David Starr Jordan

The R/V *David Starr Jordan* was commissioned and home-ported in San Diego from 1965 to 2009. For 44-years she worked exclusively on SWFSC surveys before being decommissioned in 2010. Although it no longer belongs to NOAA, many of the surveys mentioned in this report were done on this vessel. The *David Starr Jordan* is currently owned by Stabbert Maritime. She is a 52.1 m (171 ft.) steel-hulled, purpose-built research vessel powered by two White Superior diesel engines with a total of 1068 horsepower. The *David Starr Jordan* uses two propellers to achieve a sustained cruising speed of 10.0 knots. The deck equipment features five winches, two cranes, one J-frame, and a gantry. Each of the winches serves a specialized function ranging from trawling to hydrographic surveys. The ship has a flying bridge observation station, a helicopter flight deck, a bow observation chamber, and deck space for two portable lab containers. The *David Starr Jordan* can accommodate a crew of 33 people, including up to 15 scientists. The NOAA Ship R/V *Reuben Lasker* (Figure A-17) has been designated as the *David Starr Jordan*'s replacement. The vessel is currently being designed and constructed at Marinette Marine in Wisconsin and will be delivered to the West Coast in 2013 for outfitting, crew training and shakedown cruises.

Figure A-16 Former NOAA Ship R/V *David Starr Jordan*

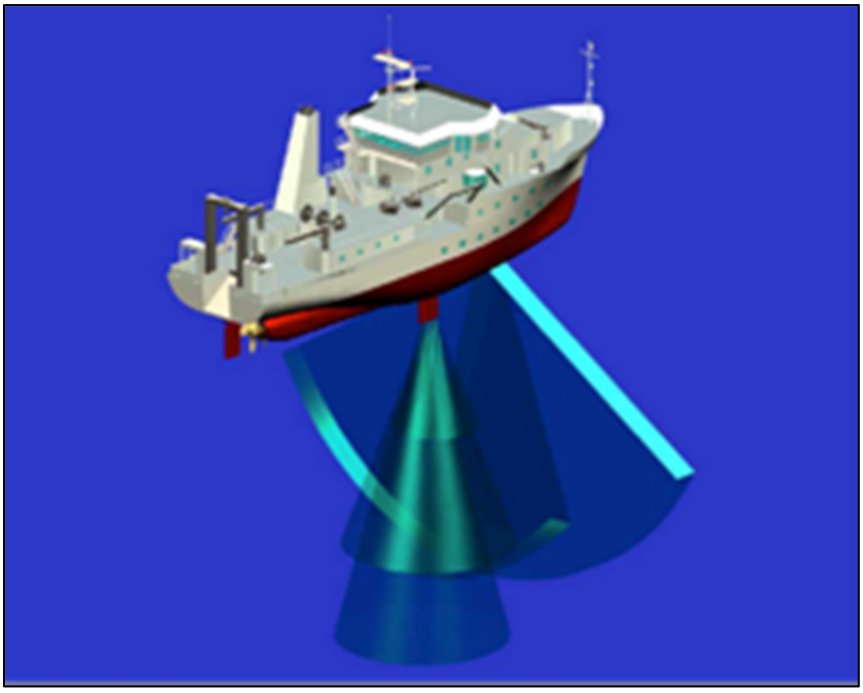

Figure A-17 Illustration of the new NOAA Ship R/V *Reuben Lasker*

The SWFSC also deploys the trailerable 33-foot R/V *Holliday* off the coast of Southern California. This high-tech vessel is equipped with an array of acoustic and optical sensors and can be used to support AUV and ROV operations. Other small boats include instrumented 5 m Zodiacs used in the Antarctic, Boston Whalers used by the turtle group, a 19-foot instrumented aluminum skiff, and several small boats located at the Santa Cruz lab.

Figure A-18 R/V *Holliday*

UNOLS and university vessels available to SWFSC

In addition to NOAA-operated research vessels, research activities may be conducted from vessels owned and operated by cooperating agencies and institutions. A wide range of research vessels are used, ranging from small open boats to modern trawlers and longliners. The sizes of the vessels used for research, engine types, cruising speeds, etc. vary depending upon the location and requirements of the research for which the vessel is used. Some of the most commonly chartered are described below.

New Horizon

The R/V *New Horizon* is part of the University-National Oceanographic Laboratory System (UNOLS) fleet, and owned by the Scripps Institution of Oceanography. The vessel is 51.2 m (170 ft.) in length, and has 2 diesel 850 hp Caterpillar engines and two Heimdal controllable-pitch propellers. One permanent crane, three winches, an A-Frame, and an inverted J-Frame style hydro boom are on the deck. The *New Horizon* was used for three seasons of the CalCOFI surveys: fall, spring, and summer, as well as a Cowcod survey.

Figure A-19 R/V *New Horizon*

Coral Sea

The R/V *Coral Sea* is owned by Humboldt State University and is 27.4 m (90 ft.) in length. It uses a 500 hp engine and 4 bladed propellers to cruise at 10 knots. Deck equipment includes one A-Frame, one crane, and two winches. This ship can accommodate up to 39 scientists and 5 crew members. The *Coral Sea* has been chartered for the PacOOS Northern California surveys to conduct monthly (weather permitting) plankton and oceanographic observations along a line of stations off Arcata in northern California using funds supplied by the SWFSC.

Figure A-20 R/V *Coral Sea*

Point Sur

The R/V *Point Sur* is part of the University-National Oceanographic Laboratory System fleet, and operated by the Moss Landing Marine Laboratories. The vessel is 41 m (135 ft.) in length, and can cruise at 9.5 knots. It has two Caterpillar diesel engines with 565hp each and two propellers. The ship can accommodate up to 21 people including 11 scientists for multi-day journeys, or up to 40 scientists for day trips. The deck equipment includes a trawl winch, a hydro winch, a CTD winch, two cranes and an A-Frame. The *Point Sur* has been used in the PacOOS surveys in central California. It is also used by Monterey Bay Aquarium Research Institute and University of California Santa Cruz to conduct sampling on CalCOFI lines 66 and 60 using funds supplied by SWFSC.

Figure A-21 R/V *Point Sur*

Charter vessels used by SWFSC:

Yuzhmorgeologiya

The R/V *Yuzhmorgeologiya* is a Russian ice class ship, owned by CGGE International, capable of stable operations in extreme conditions. It had been chartered for 15-years by AERD to conduct its Antarctic surveys. In 2010, the government pulled the vessel from competitive bidding on a charter renewal and indicated that it will be unavailable for an indefinite period. The ship is 104.5 m (342.8 ft.) in length and has two 3500hp engines to cruise at 10 knots. The deck has an A-Frame, two J-Frames, four cranes, and several winches: 2 trawl, 4 geophysical, one air gun, and two others. This charted vessel can accommodate 30 guests. The *Yuzhmorgeologiya* is used in the AMLR Program surveys.

Figure A-22 **R/V *Yuzhmorgeologiya***

Moana Wave

The R/V *Moana Wave* is a research vessel owned and chartered out by Stabbert Maritime. The ship is 64 m (210 ft.) in length, and has two Cat 398 engines with 850hp each and one propeller to keep a cruising speed of 10 knots. Deck machinery includes an A-Frame gantry, two hydraulic cranes, and two winches. The vessel boasts 4,479 square feet of working deck space. The *Moana Wave* was chartered by AERD to conduct their 2010 and 2011 Antarctic surveys.

Figure A-23 R/V *Moana Wave*

F/V Frosti

F/V *Frosti* is a 130-foot trawler registered in Canada that has been used to conduct portions of the coastwide sardine survey, the juvenile rockfish survey and the juvenile salmon survey.

Figure A-24 F/V *Frosti*

La Mer

The *La Mer* (which stands for Los Angeles Marine Environmental Research) was commissioned to be built by the city of Los Angeles for collecting water quality samples and various other biological samplings. The vessel is 25.6 m (84 ft.) in length with a displacement of 56 tons. Its two diesel engines run at 764bhp each. The ship can accommodate up to 8 persons, including scientists. On the deck are A-Frames, oceanographic winches, and sea cranes. The *La Mer* has been used on nearshore ichthyoplankton surveys in the California Current.

Aircraft used by SWFSC:

A NOAA-owned Twin Otter (currently based in Monterey, California) and various charter aircraft have been used by SWFSC to conduct surveys of coastal harbor porpoise, and several species of oceanic dolphins and whales, marine turtles, and pinnipeds.

Figure A-25 Aircraft used for SWFSC research

Other observation platforms developed and used by SWFSC:

Underwater Autonomous Vehicles (UAVs)

Light-Weight Instrumented Buoys

Unmanned Aerial Vehicles (UAVs)

Moored Instrument Arrays

Miniaturized Echosounders

Figure A-26 Other observation platforms developed and used by SWFSC.

References:

Aquatic Research Instruments (2011). <http://www.aquaticresearch.com > [accessed 16 March 2011].

Churnside, J. H., D. Griffith, D. A. Demer, R. L. Emmett, and R. D. Brodeur. (2009). Comparisons of Lidar, acoustic and trawl data on two scales in the Northeast Pacific Ocean. Calif. Coop. Oceanic Fish. Invest. Rep. 50:118–122. http://calcofi.org/publications/calcofireports/v50/118-122_Churnside.pdf

Dotson, R.C., Griffith, D.A., King, D.L., and Emmett, R.L. (2010). Evaluation of a marine mammal excluder device (MMED) for a Nordic 264 midwater rope trawl. U.S. Dep. Commerce, NOAA Tech.Memo.NOAA-TM-NMFS-SWFSC-455. http://swfsc.noaa.gov/publications/TM/SWFSC/NOAA-TM-NMFS-SWFSC-455.pdf

Net Systems Inc. < http://www.net-sys.com> [accessed 16 March 2011].

Oozeki, Y., F.X. Hu, H. Kubota, H. Sugisaki, and R. Kimura. (2004). Newly designed quantitative frame trawl for sampling larval and juvenile pelagic fish. Fisheries Science 70: 223-232

Stauffer, Gary (compiler). (2004). NOAA Protocols for Groundfish Bottom Trawl Surveys of the Nation's Fishery Resources. U.S. Dep. Commerce, NOAA Tech. Memo. NMFS-F/SPO-65.

Yasook, N., Taradol, A., Timkrub, T.,Reungsivakul, N., and Siriraksophon, S. (2007). Standard Operating Procedures of Isaacs-Kidd Mid Water Trawl. Southeast Asian Fisheries Development Center. TD/RES 112.

WHOI (2011). Woods Hole Oceanographic Institution, Ships and Technology. <http://www.whoi.edu/ships_technology/> [accessed 16 March 2011].