MANTA SURFACE TOW CONSTRUCTION DETAILS
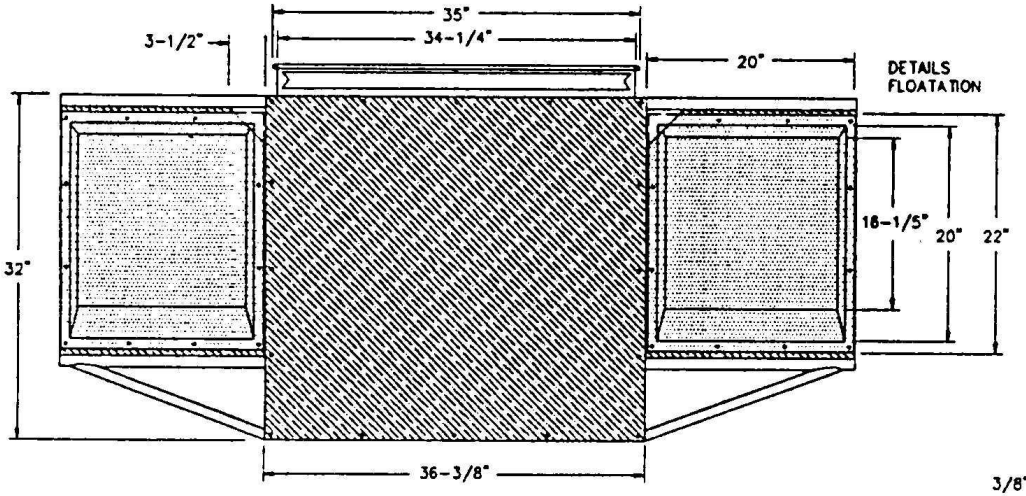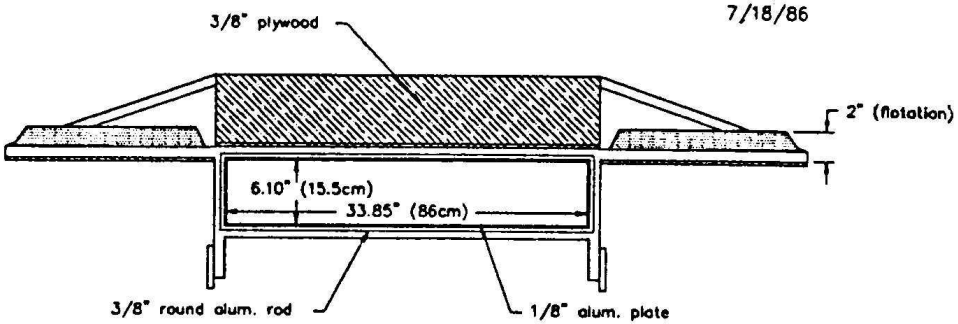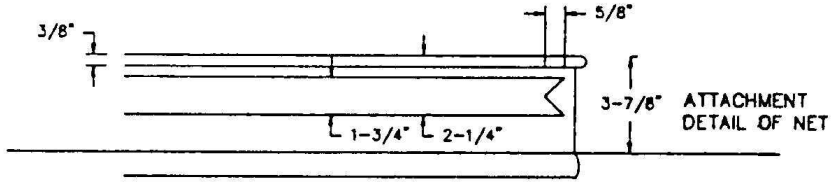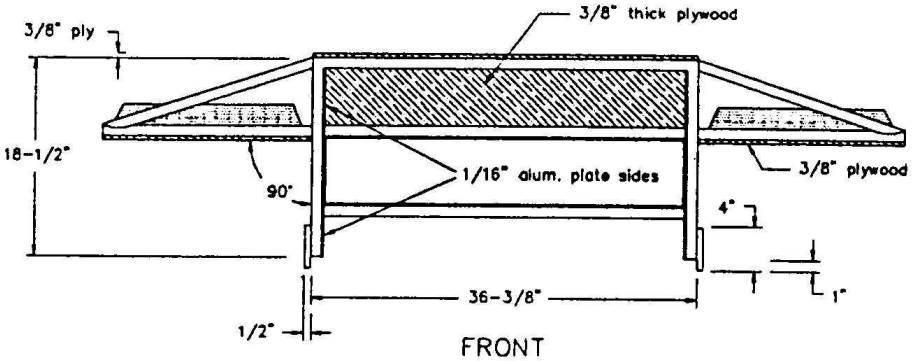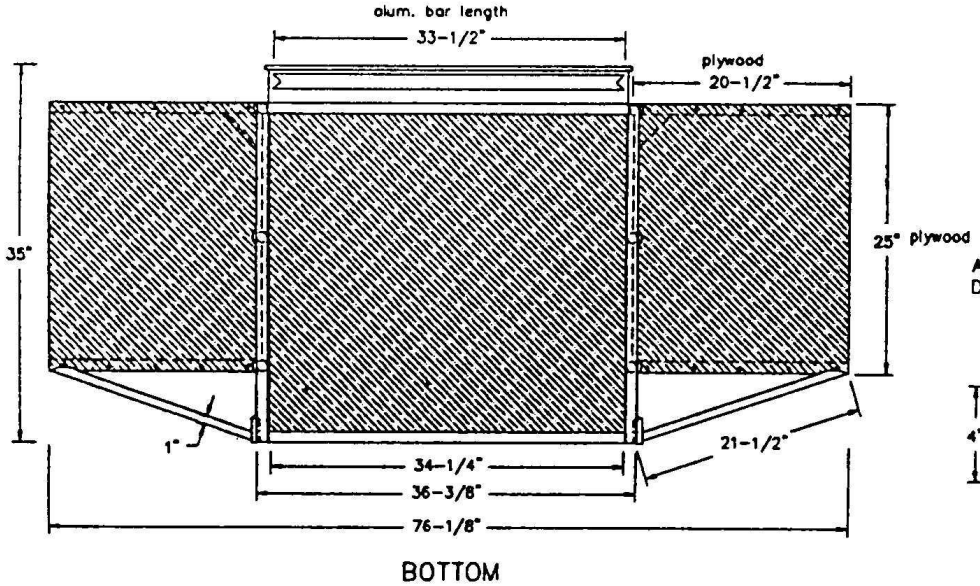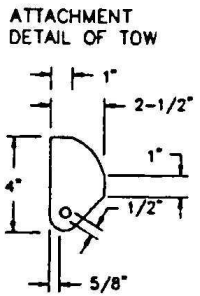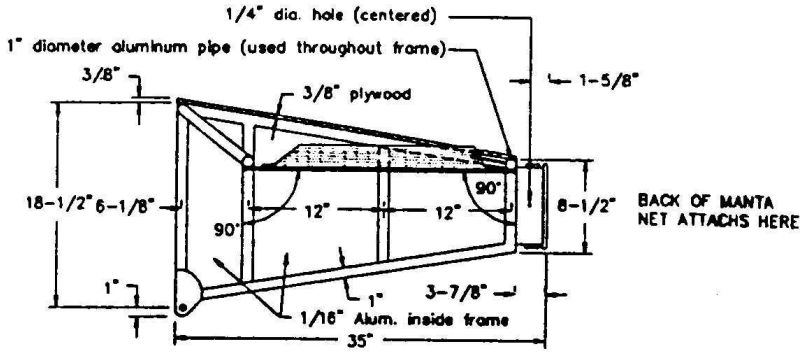
7/18/86